PRAMET

PSKN(RL) EXT

P M K N S H

T90-T99

P

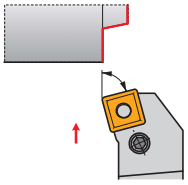

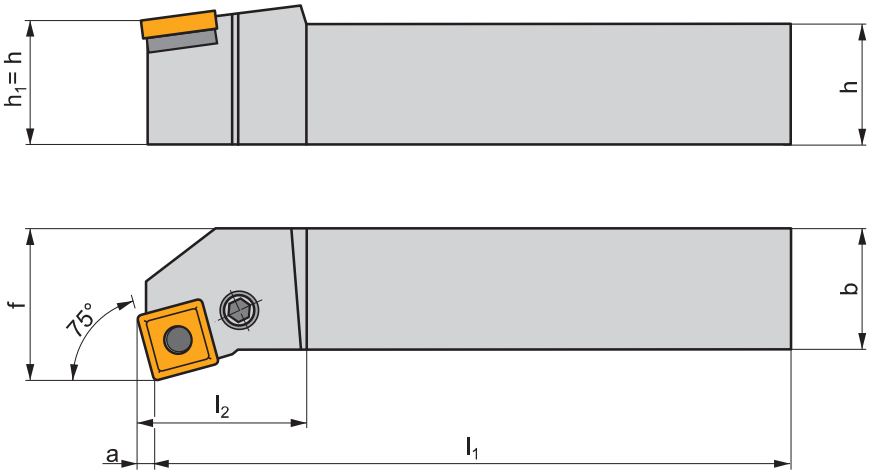

ISO	h=h1	b	f	l1	l2	a	λs°	γo°	kg		
PSKNR/L 2020 K 12	20	20	25	125	36,0	3,1	-6	-6	0,42	GI029	PS22
PSKNR/L 2525 M 12	25	25	32	150	36,0	3,1	-6	-6	0,68	GI029	PS20
PSKNR/L 3225 P 15	32	25	32	170	40,0	3,9	-6	-6	1,10	GI082	PS40
PSKNR/L 3232 P 19	32	32	40	170	45,0	4,6	-6	-6	1,40	GI026	PS50
PSKNR/L 4040 S 19	40	40	50	250	45,0	4,6	-6	-6	3,10	GI026	PS50
PSKNR/L 4040 S 25	40	40	50	250	50,0	6,5	-6	-6	3,20	GI027	PS60
PSKNR/L 5050 T 25	50	50	60	300	50,0	6,5	-6	-6	5,80	GI027	PS60
PSKNR/L 5050 T 2509	50	50	60	300	50,0	6,5	-6	-6	5,80	GI040	PS70

GI026	SN.. 1906..
GI027	SN.. 2507..
GI029	SN.. 1204..
GI040	SN.. 2509..
GI082	SN.. 1506..
GI162	SN.. 2512..

				Nm					
PS20	SNU 120312	PU 02	US 35	6,0	M8x1	22,5	NT 05	MT 05	HXK 4
PS22	SNU 120312	PU 02	US 42	6,0	M8x1	21	NT 05	MT 05	HXK 4
PS40	SNU 150312	PU 04	US 36	6,0	M8x1	26	NT 07	MT 07	HXK 4
PS50	SNU 190416	PU 05	US 38	8,0	M10x1	29	NT 06	MT 06	HXK 5
PS60	SNU 250624	PU 06	US 39	8,0	M10x1	33	NT 08	MT 08	HXK 5
PS70	SNU 250624	PU 06	US 47	8,0	M12x1	36	NT 08	MT 08	HXK 5
PS72	SNU 250624	PU 10-N	PS 12040	8,0	M12x1	40	NT 08	MT 08	HXK 5